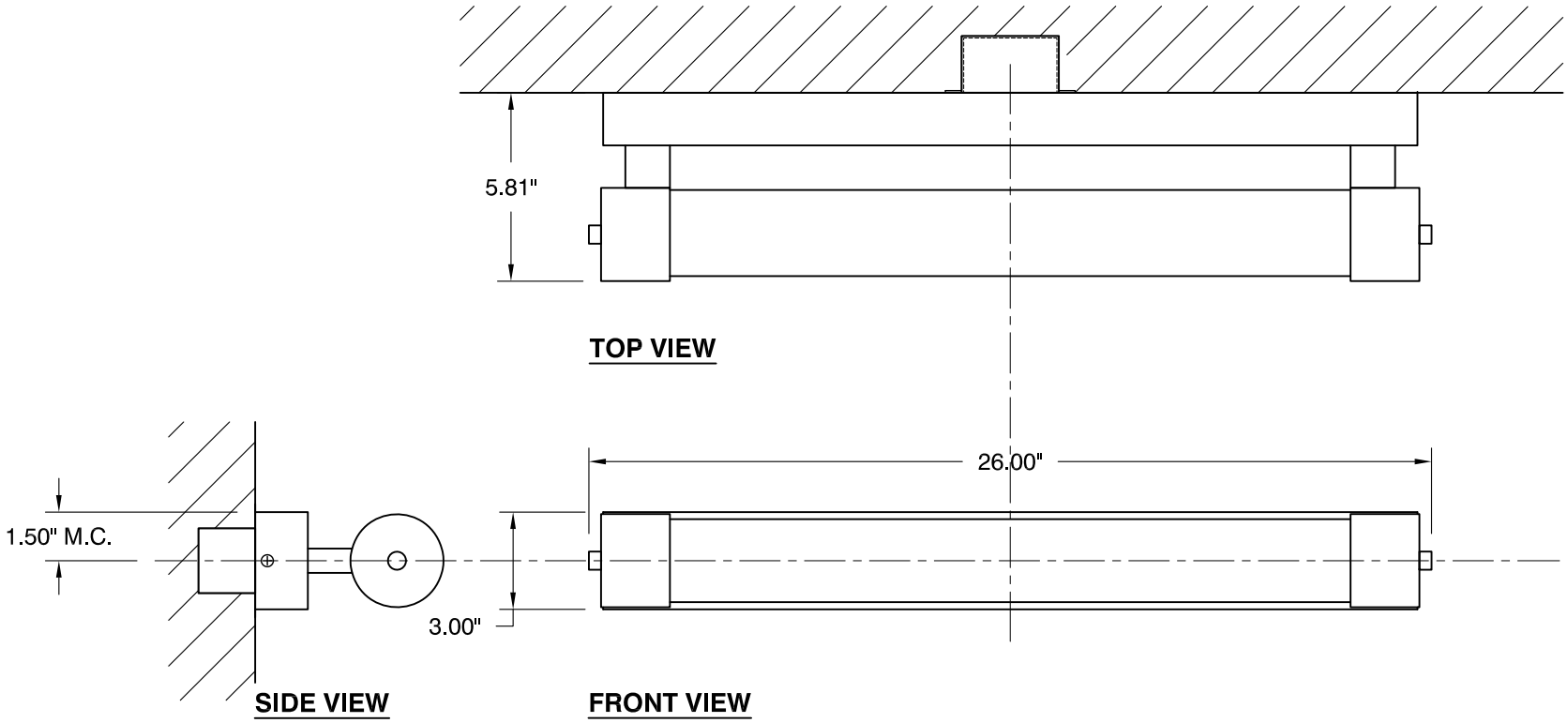

24" HORIZON LED vanity

120v **3-593-14**

277v **37-593-14**

OXYGEN LIGHTING ©

LAMPING
- o (1x) 11.6w LED array
- o 3000K, 350mA
- o Initial Lumens: 1879 lm
- o Delivered Lumens: TBD
- o CRI >80
- o Color Consistency: 3 Step MacAdam Ellipse

DRIVER (Dimmable)
- o (1x) 0-10v & Reverse Phase Dimming Constant Current, 12w, 350mA

INPUT VOLTAGE
- o 120v OR 277v 50/60Hz

METAL FINISHES
- o **14** - Polished Chrome
- o **24** - Satin Nickel

DIFFUSER
- o Matte White Acrylic

DIMENSIONS
- o 26.00" (w) x 3.00" (h) x 5.81" (ext.)

INSTALLATION
- o 2" x 3" J-Box
- o ETL Dry/Damp Listed
- o Conforms to UL STD 1598
- o Certified CAN/CSA STD C22.2 No. 250.0

Sample Catalog Number

Series #	Finish	=	Catalog Number
3-593	**24**		3-593-**24**

oxygen

OXYGEN LIGHTING
201 RAILHEAD RD, FORT WORTH, TX 76106
TEL. (877) 607-0202 FAX (877) 607-0203
WWW.OXYGENLIGHTING.COM

PROJECT: _____

DATE: _____