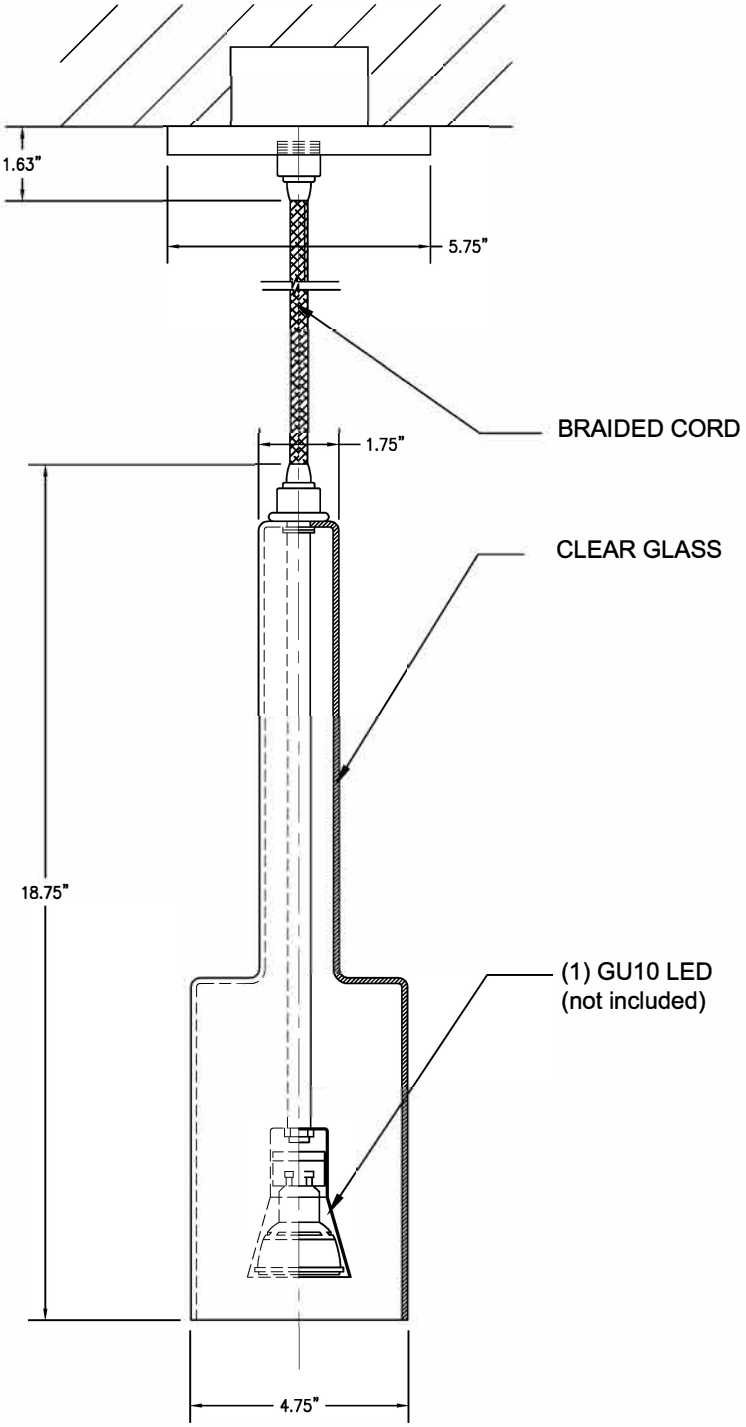

FRONT VIEW

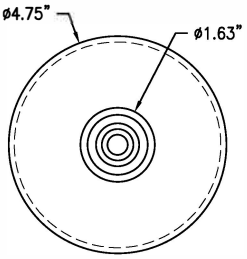

TOP VIEW

SPINDLE pendant
oxygen **3-604-2525**

OXYGEN LIGHTING ©

LAMPING
- o (1x) 7w LED GU10 (not included)
- o 7w MAX
- o GU10 base
- o Initial Lumens (3000K): 520 lm
- o Delivered Lumens (3000K): 500 lm

METAL & GLASS FINISHES
- o 14 - Clear Glass w/ Polished Chrome
- o 1314 - Smoked Ombre Glass w/ Polished Chrome
- o 1414 - Mirrored Glass w/ Polished Chrome
- o 2018 - Coffee Ombre Glass w/ Gunmetal
- o 2525 - Copper Glass w/ Copper

INPUT VOLTAGE
- o 120V

DIMENSIONS
- o 4.75" W x 18.75" H
- o 5.75" canopy

INSTALLATION
- o 4" octagonal J-Box
- o ETL Dry/Damp Listed
- o Conforms to UL STD 1598
- o Certified CAN/CSA STD C22.2 No. 250.0

Sample Catalog Number

Series #	Finish	=	Catalog Number
3-604	**1314**		3-604-**1314**

oxygen

OXYGEN LIGHTING
201 RAILHEAD RD, FORT WORTH, TX 76106
TEL. (877) 607-0202 FAX (877) 607-0203
WWW.OXYGENLIGHTING.COM

PROJECT: _____

DATE: _____