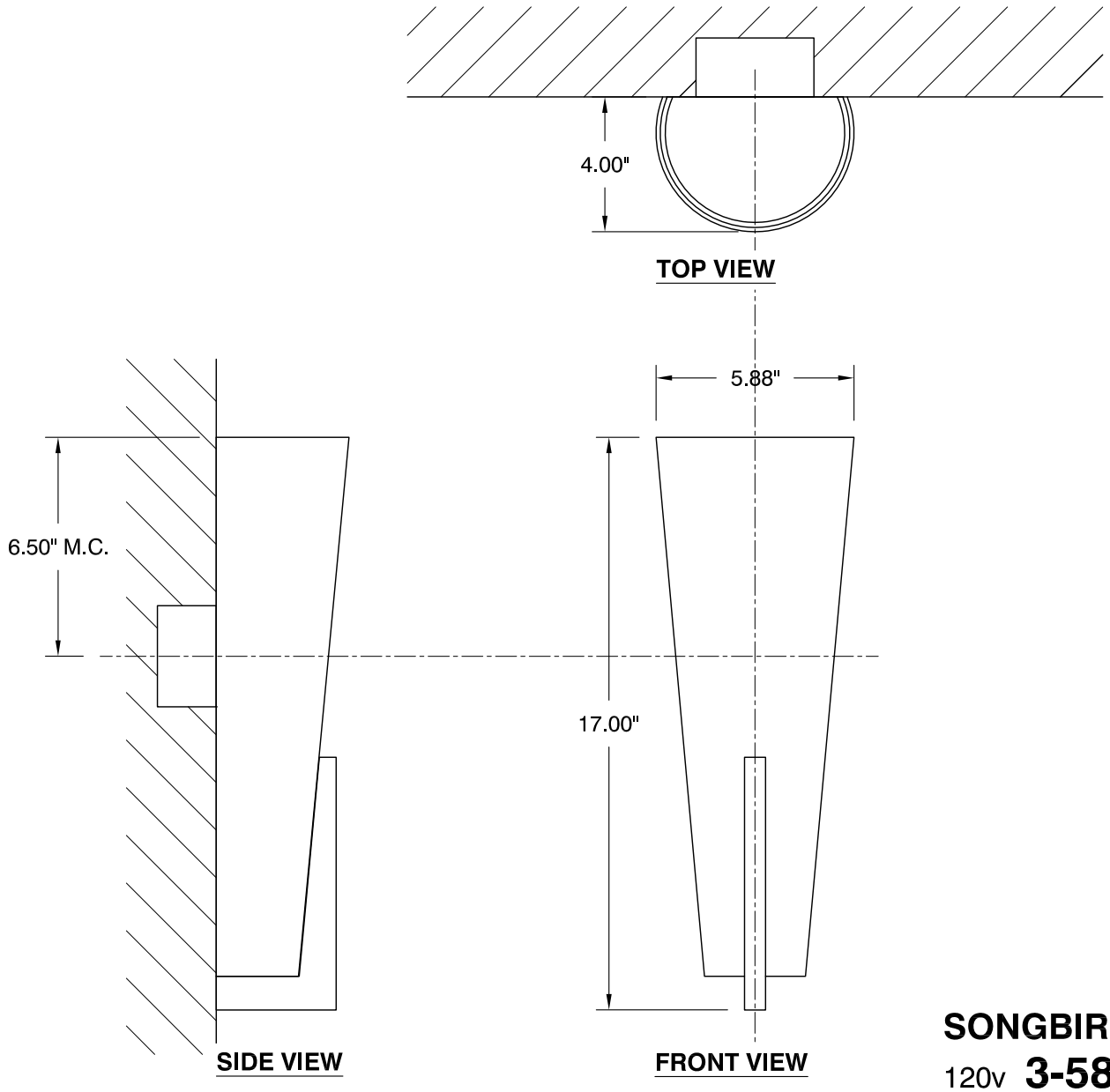

SONGBIRD sconce

120v **3-589-614**

277v **37-589-614**

OXYGEN LIGHTING ©

LAMPING
- o (1x) 10.1w LED Array
- o 3000K, 350mA
- o Initial Lumens: 1460
- o Delivered Lumens: TBD
- o CRI > 80
- o Color Consistency: 3 step MacAdam Ellipse

METAL FINISHES
- o **14** - Polished Chrome
- o **24** - Satin Nickel

DIFFUSERS
- o **1** - White Opal Glass
- o **2** - Matte White Acrylic
- o **6** - Silver Cloth Acrylic

DIMENSIONS
o 5.88" (w) x 17.00" (h) x 4.00" (ext.)

INSTALLATION
- o 2" x 3" or 4" Octagonal J-Box
- o ETL Dry/Damp Listed
- o ADA
- o Conforms to UL STD 1598
- o Certified CAN/CSA STD C22.2 No. 250.0

DRIVER (Dimmable)
- o (1x) 0-10v & Reverse Phase Dimming Constant Current, 12w, 350mA

INPUT VOLTAGE
- o 120v OR 277v 50/60Hz

Sample Catalog Number

Series #	Diffuser	Finish	=	Catalog Number
3-589	**2**	**24**		3-589-**224**

oxygen

OXYGEN LIGHTING
201 RAILHEAD RD, FORT WORTH, TX 76106
TEL. (877) 607-0202 FAX (877) 607-0203
WWW.OXYGENLIGHTING.COM

PROJECT: _____

DATE: _____