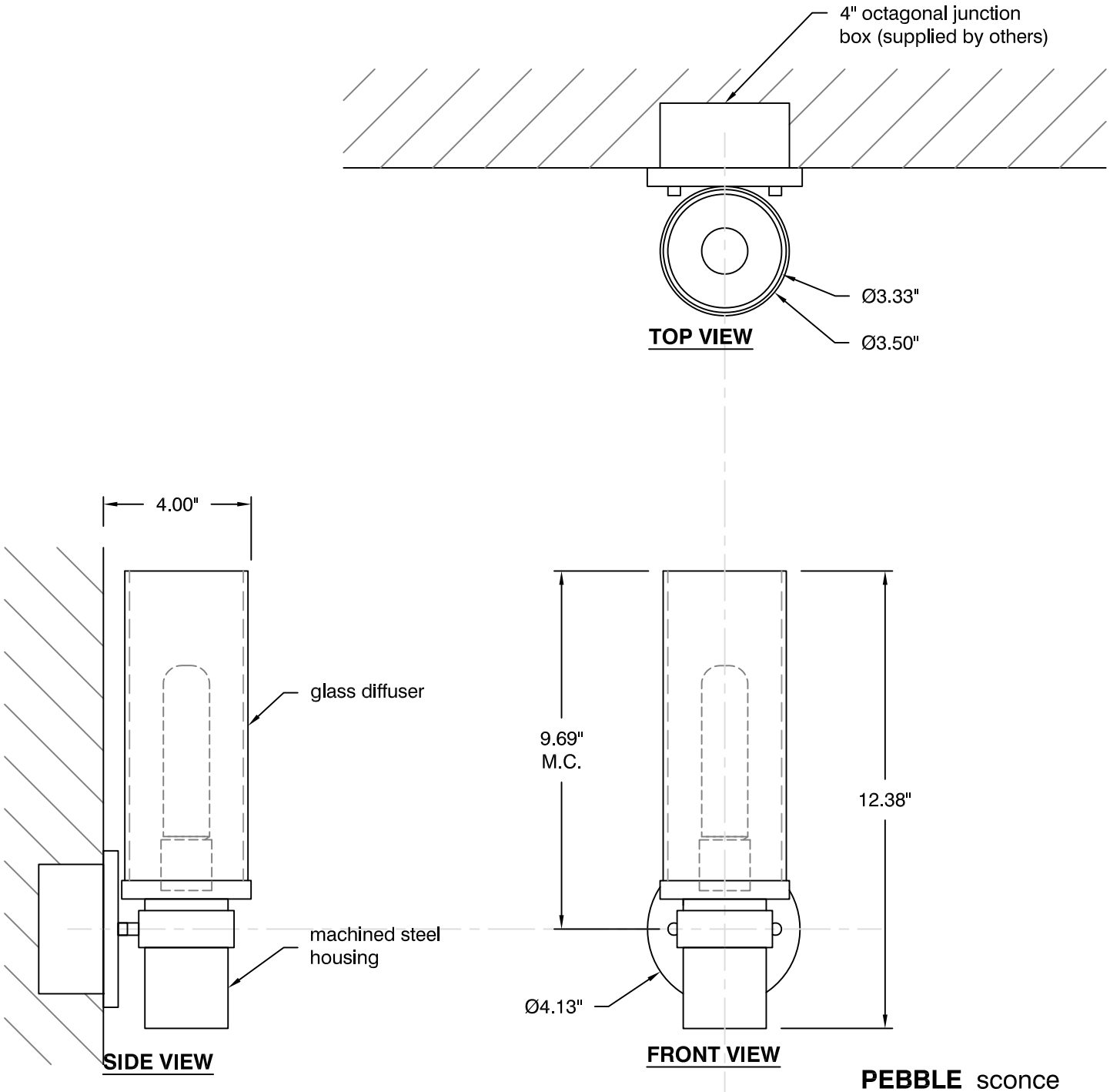

PEBBLE sconce

oxygen **2-573-324**

OXYGEN LIGHTING ©

LAMPING
- o (1x) 60w T10 Incandescent (med)
- o Initial Lumens: 655 lm

METAL FINISHES
- o **14** - Polished Chrome
- o **24** - Satin Nickel

DIMENSIONS
- o 4.13" (w) x 12.38" (h) 4" ext. from wall

INSTALLATION
- o 4" octagonal J-Box
- o UL Damp Listed
- o ADA

VOLTAGE
- o 120V

DIFFUSERS
- o **1** - White Opal Glass
- o **3** - White Opal Glass with Perforated Sleeve Overlay

c UL us LISTED

Sample Catalog Number

Series #		Diffuser	Finish		Catalog Number
2-573	-	1	14	=	2-573-114

oxygen

OXYGEN LIGHTING
201 RAILHEAD RD, FORT WORTH, TX 76106
TEL. (877) 607-0202 FAX (877) 607-0203
WWW.OXYGENLIGHTING.COM

PROJECT: _____

DATE: _____