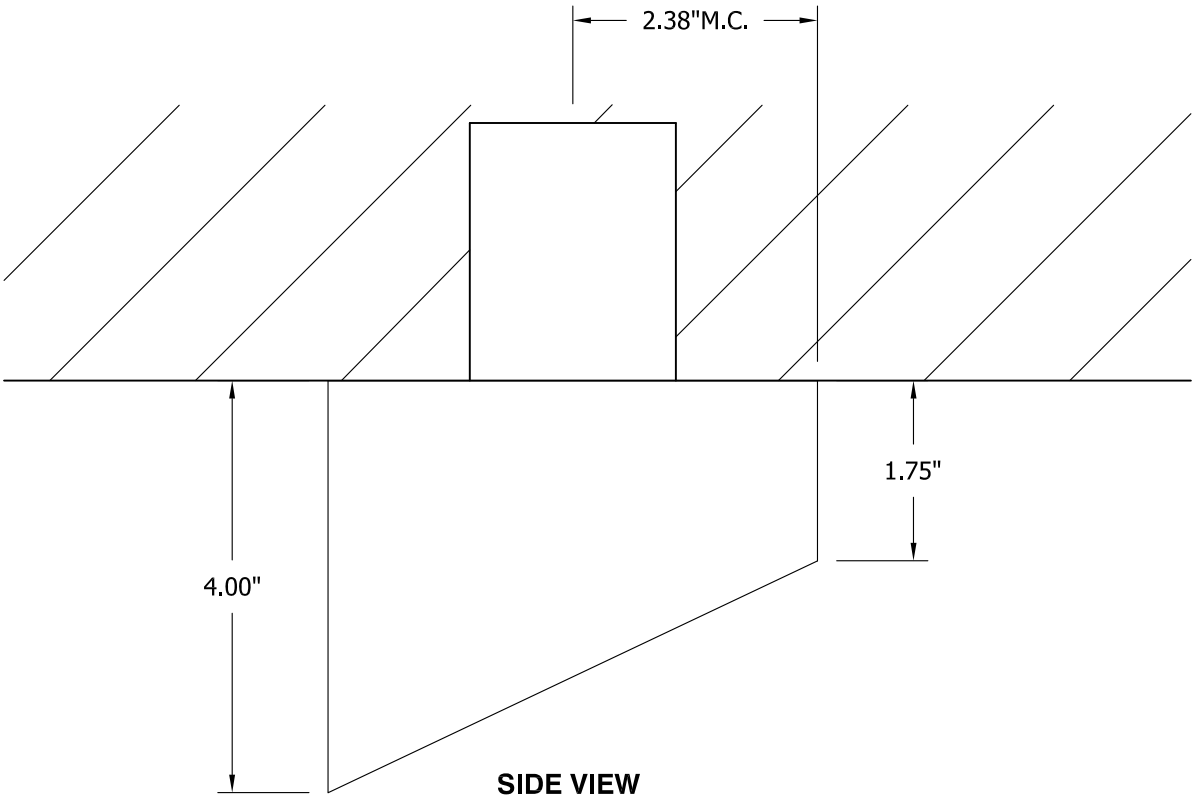

SIDE VIEW

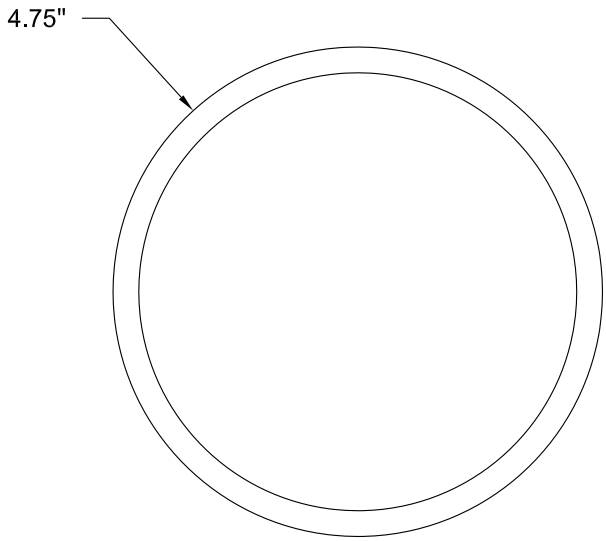

BOTTOM VIEW

ZEEPERS surface

120v **3-560-40**

277v **37-560-40**

OXYGEN LIGHTING ©

REVISED 11/16/16

LAMPING
- o (1x) 8.2w LED array
- o 3000K, 350mA (ea.)
- o Initial Lumens: 950 lm
- o Delivered Lumens: TBD lm
- o CRI>90
- o Color Consistency: 3 Step MacAdam Ellipse

DRIVER (DImmable)
- o (1x) 0-10v & Reverse Phase Dimming Constant Current, 12W, 350mA

METAL FINISHES
- o **22** - Oiled Bronze
- o **24** - Satin Nickel
- o **40** - Aged Brass

DIFFUSER
- o Matte White Acrylic

INPUT VOLTAGE
- o 120v OR 277v 50/60Hz

DIMENSIONS
- o 4.75" (Dia.) x 4.00" (h)

INSTALLATION
- o 2" x 3" J-Box
- o 4" Octagon J-Box
- o ETL Dry/Damp Listed
- o ADA
- o Conforms to UL STD 1598
- o Certified CAN/CSA STD C22.2 No. 250.0

Sample Catalog Number				
Series #		Finish		Catalog number
3-560	-	**24**	=	3-560-**24**

oxygen

OXYGEN LIGHTING
201 RAILHEAD RD, FORT WORTH, TX 76106
TEL. (877) 607-0202 FAX (877) 607-0203
WWW.OXYGENLIGHTING.COM

PROJECT: _____

DATE: _____