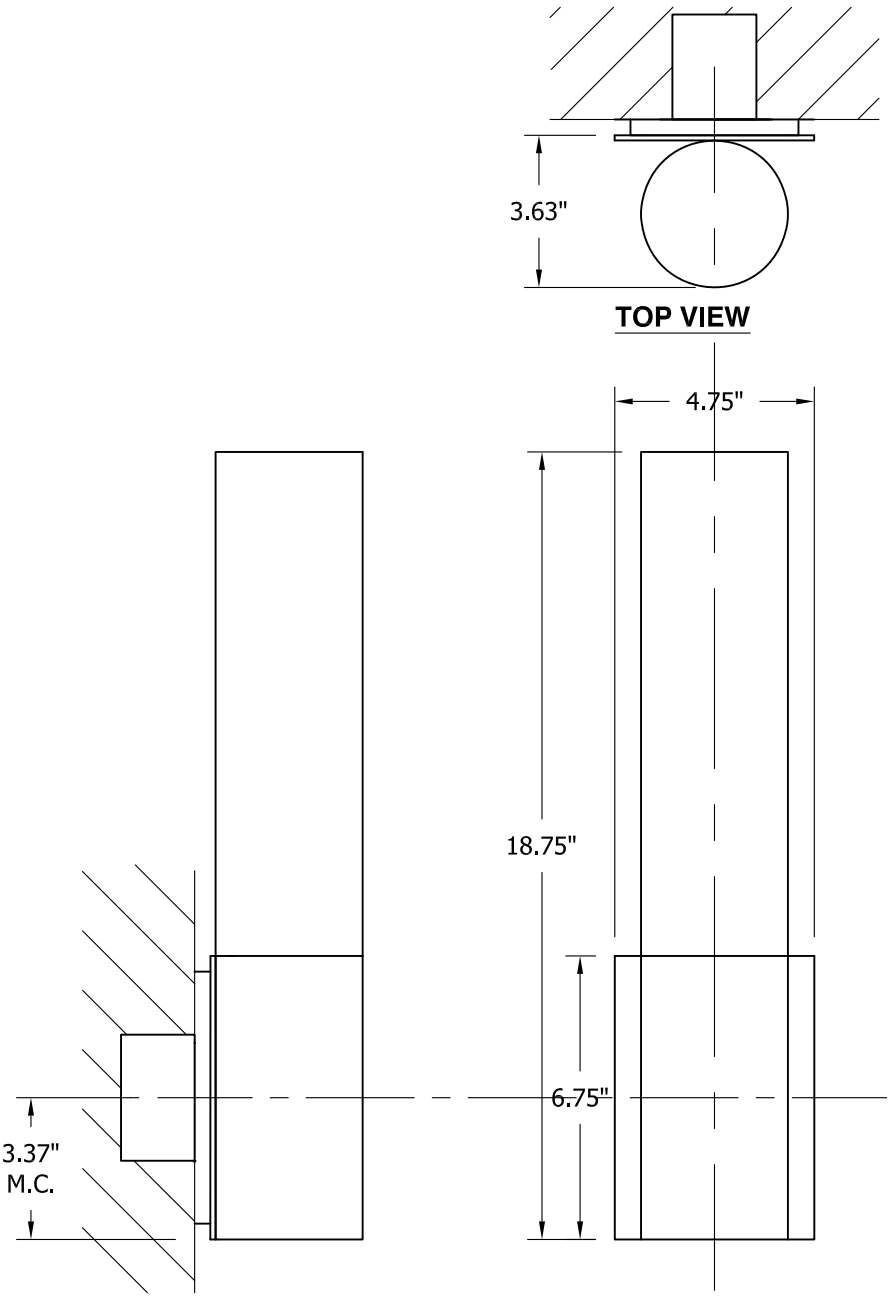

MAGNUM sconce

120v **3-518-40**

277v **37-518-40**

REVISED 4/18/17

OXYGEN LIGHTING ©

LAMPING

- o (1x) 11.9w LED Array
- o 3000k, 350mA
- o Initial Lumens: 1418 lm
- o Delivered Lumens: TBD lm
- o CRI >90
- o Color Consistency: 3 step MacAdam Ellipse

DRIVER (Dimmable)

- o (1x) 0-10v & Reverse Phase Dimming, Constant Current, 12w, 350mA

METAL FINISHES

- o **14** - Polished Chrome
- o **24** - Satin Nickel
- o **25** - Satin Copper
- o **40** - Aged Brass

DIFFUSER

- o Matte White Acrylic
- o **1** - White Opal Glass

INPUT VOLTAGE

- o 120v OR 277v 50/60Hz

DIMENSIONS

- o 4.75" (w) x 18.75" (h) x 4.00" (ext.)

INSTALLATION

- o 2" x 3" J-Box
- o 4" Octagonal J-Box
- o ETL Dry/Damp Listed
- o ADA
- o Conforms to UL STD 1598
- o Certified CAN/CSA STD C22.2 No. 250.0

Sample Catalog Number

Series #		Glass	Finish	=	Catalog Number
3-518	-	1	24		3-518-**124**

oxygen

OXYGEN LIGHTING
201 RAILHEAD RD, FORT WORTH, TX 76106
TEL. (877) 607-0202 FAX (877) 607-0203
WWW.OXYGENLIGHTING.COM

PROJECT: _____

DATE: _____