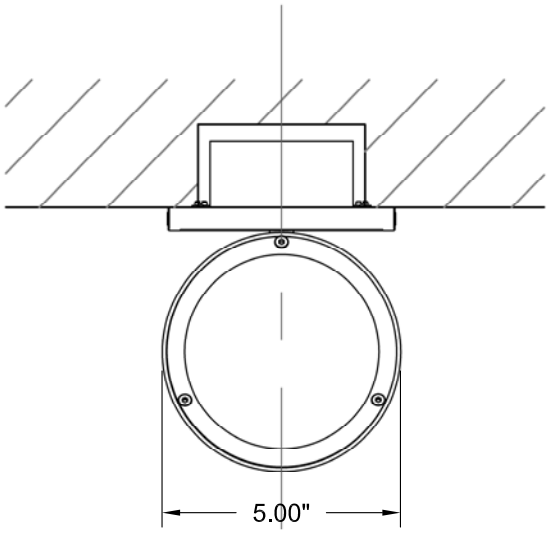


TOP VIEW

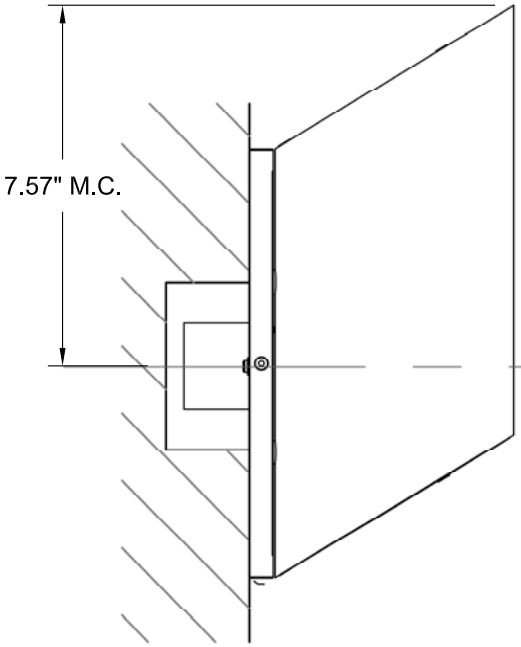


SIDE VIEW

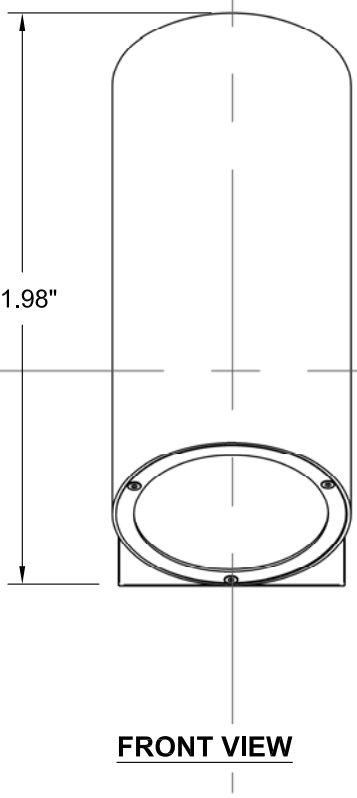


FRONT VIEW

# REALM outdoor

120v **3-750-16**

277v **37-750-16**

OXYGEN LIGHTING ©

REVISED 11/16/16

## LAMPING
- o (2x) 8.2w LED array
- o 3000K, 350mA (ea.)
- o Initial Lumens: 1900 lm
- o Delivered Lumens: TBD
- o CRI>90
- o Color Consistency: 3 Step MacAdam Ellipse

## DRIVER (Dimmable)
- o (2x) 0-10v & Reverse Phase Dimming, Constant Current, 12w, 350mA

## METAL FINISHES
- o **16 -** Gray
- o **22 -** Oiled Bronze

## DIFFUSER
- o Clear Frosted Glass

## INPUT VOLTAGE
- o 120 OR 277v 50/60HZ

## DIMENSIONS
- o 5.00" (w) X 12.00" (h) X 5.54" (ext.)

## INSTALLATION
- o 4" J-Box
- o ETL WET Listed
- o ADA
- o Conforms to UL STD 1598
- o Certified CAN/CSA STD C22.2 No. 250.0

**Sample Catalog Number**

| Series # | Finish | Catalog number |
|---|---|---|
| 3-750 | - **22** = | 3-750-22 |

oxygen

**OXYGEN LIGHTING**
**201 RAILHEAD RD., FORT WORTH, TX 76106**
**TEL. (877) 607-0202 FAX (877) 607-0203**
**WWW.OXYGENLIGHTING.COM**

PROJECT: _____

DATE: _____