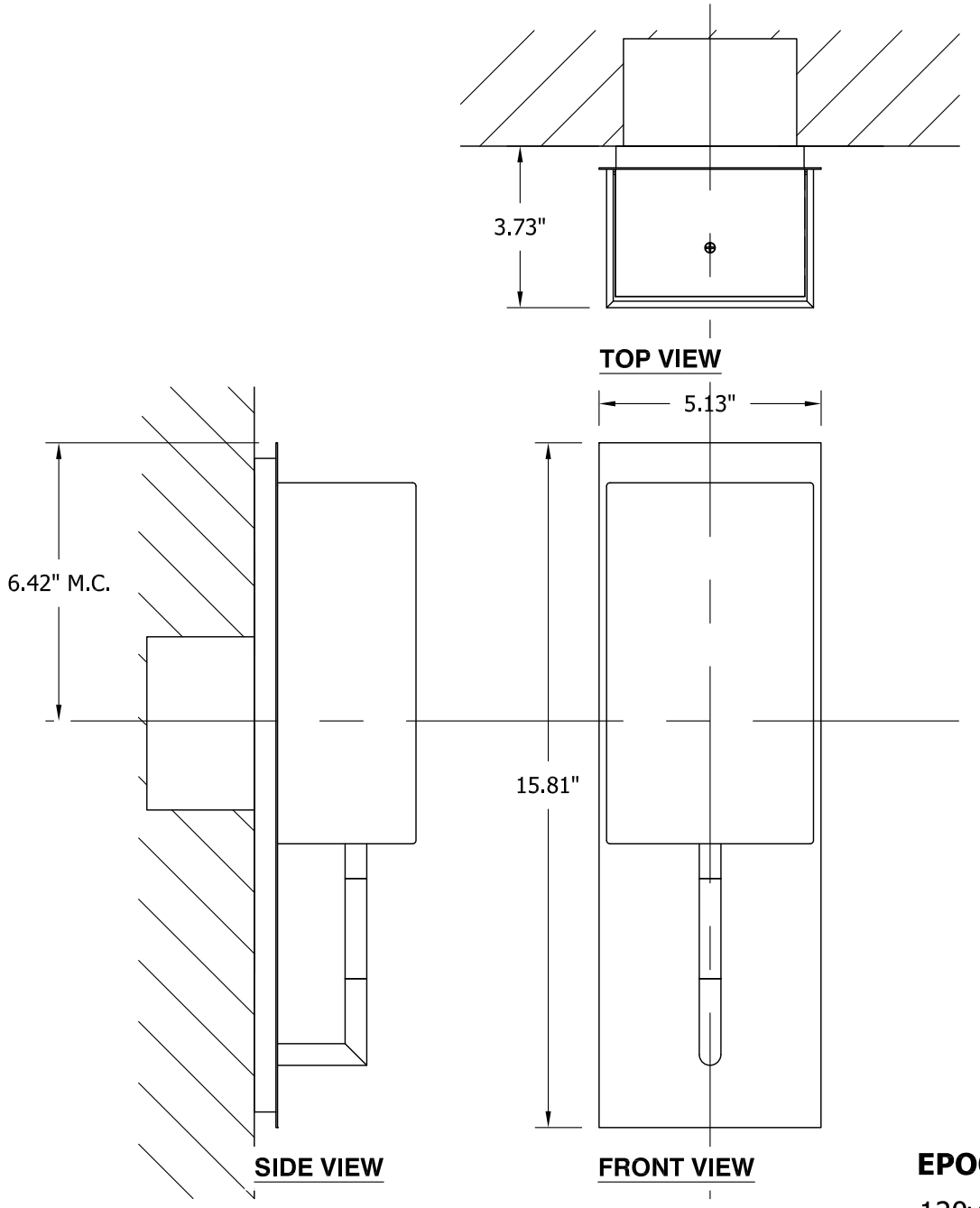

EPOCH sconce

120v **3-564-124**

277v **37-564-124**

REVISED 12/12/16

OXYGEN LIGHTING ©

LAMPING
- o (1x) 8.2w LED array
- o 3000K, 350mA
- o Initial Lumens: 950 lm
- o Delivered Lumens: TBD
- o CRI > 90
- o Color Consistency: 3 step MacAdam Ellipse

DRIVER (DImmable)
- o (1x) 0-10v & Reverse Phase Dimming Constant Current, 12w, 350mA

METAL FINISHES
- o **22** - Oiled Bronze
- o **24** - Satin Nickel
- o **40** - Aged Brass

DIFFUSER
- o **1** - White Cotton
- o **2** - Matte White Acrylic

INPUT VOLTAGE
- o 120v OR 277v 50/60Hz

DIMENSIONS
- o 5.13" (w) x 15.81" (h) x 3.73" (ext.)

INSTALLATION
- o 4" Octagonal J-Box
- o ETL Dry/Damp Listed
- o ADA
- o Conforms to UL STD 1598
- o Certified CAN/CSA STD C22.2 No. 250.0

Sample Catalog Number				
Series #	Diffuser	Finish	=	Catalog Number
3-564	1	24		3-564-**124**

oxygen

OXYGEN LIGHTING
201 RAILHEAD RD, FORT WORTH, TX 76106
TEL. (877) 607-0202 FAX (877) 607-0203
WWW.OXYGENLIGHTING.COM

PROJECT: _____

DATE: _____